SR SUNTOUR

SF7-XCT-LO 26-75
model year 2006 2007

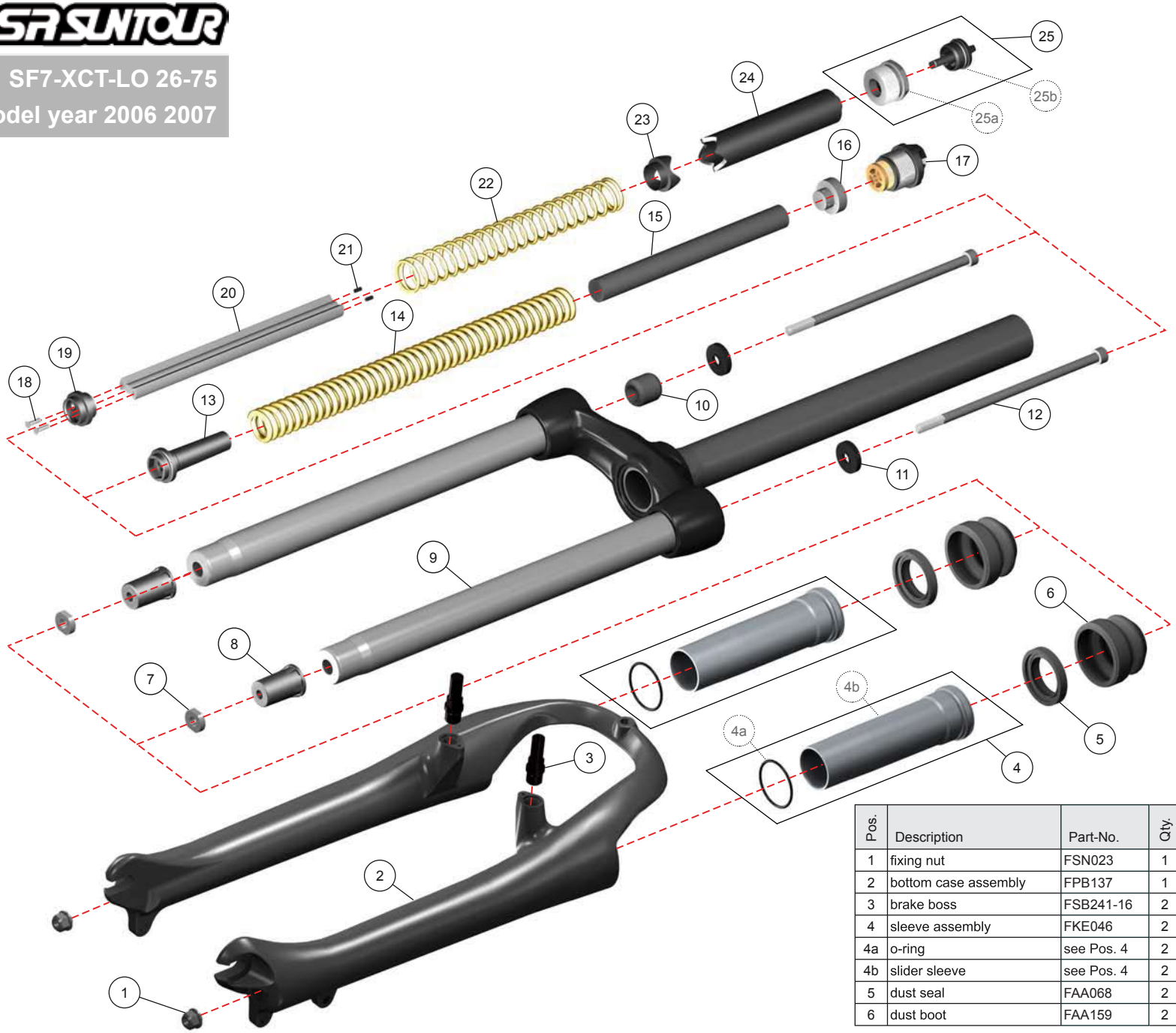

Pos.	Description	Part-No.	Qty.
1	fixing nut	FSN023	1
2	bottom case assembly	FPB137	1
3	brake boss	FSB241-16	2
4	sleeve assembly	FKE046	2
4a	o-ring	see Pos. 4	2
4b	slider sleeve	see Pos. 4	2
5	dust seal	FAA068	2
6	dust boot	FAA159	2

Pos.	Description	Part-No.	Qty.
7	nut plate	FSN025	2
8	bottom stopper	FEE521	2
9	upper assembly	FKE084-00	1
10	rebound rubber	FEP086	1
11	bolt holder	FEE491-10	2
12	fixing bolt	FSB109-20	2
13	lower spring guide	FEE522	1
14	main spring	FEP285	1
15	damper	FEP294	1
16	upper spring guide	FEE196-10	1
17	preload adjuster	FKE007	1
18	s-bolt	FSB108	2
19	spring stopper	FEE492	1
20	lower stopper	FEE496	1
21	bottom damper	FEP263	2
22	sub spring	FEP265	1
23	lower index	FEE495	1
24	upper stopper	FEE490-10	1
25	Lockout Cap Set	FKE082-00	1
25a	lock out adjuster	see Pos. 25	1
25b	lock out adjuster knob	see Pos. 25	1

explosion drawing sr suntour **XCT-LO 26-75**, SF6, english, 2006/01/08, V1.0