SR SUNTOUR

SF8-NEX4600-HLO-26"
model year 2008

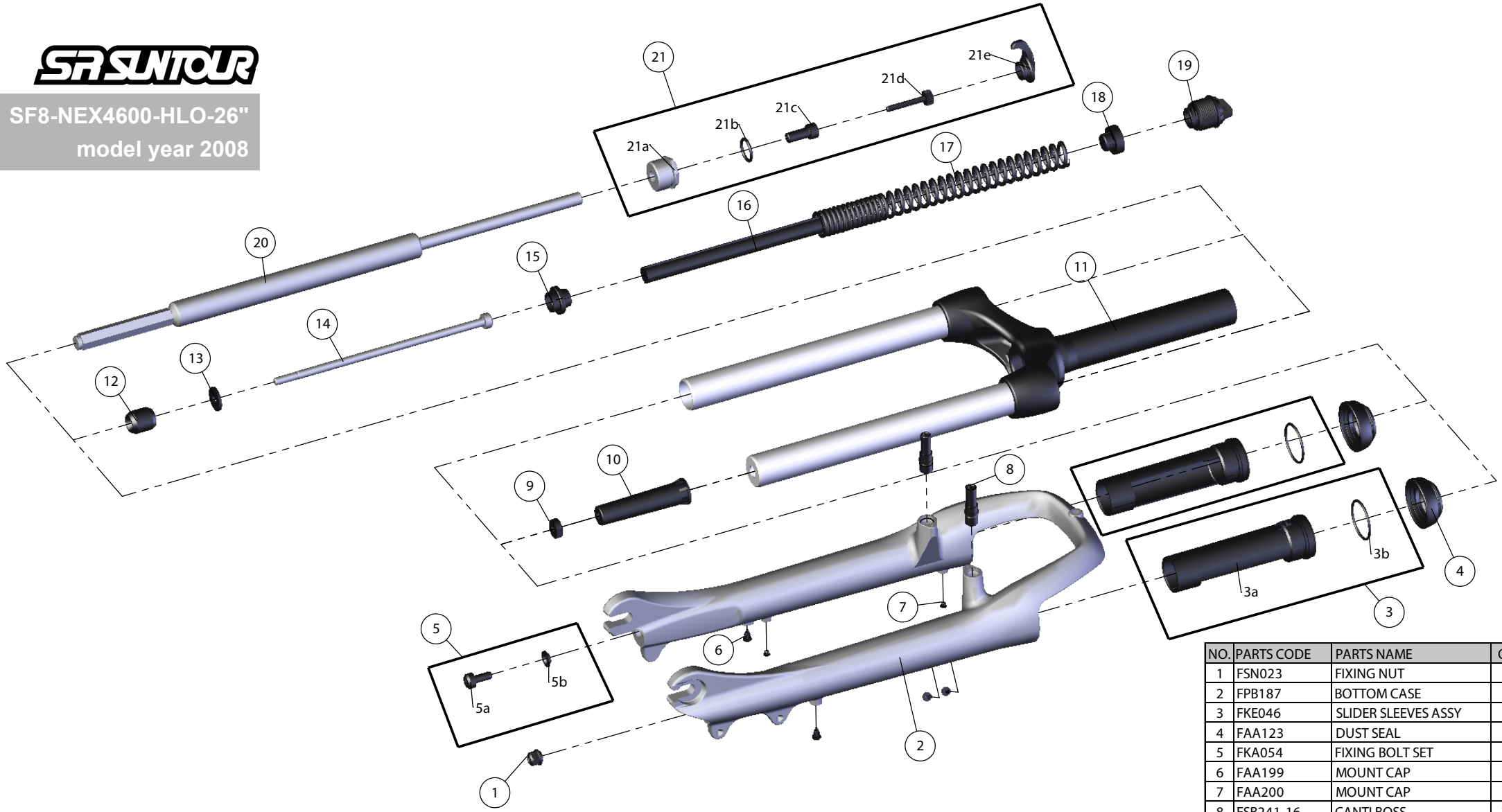

NO.	PARTS CODE	PARTS NAME	QT
1	FSN023	FIXING NUT	1
2	FPB187	BOTTOM CASE	1
3	FKE046	SLIDER SLEEVES ASSY	2
4	FAA123	DUST SEAL	2
5	FKA054	FIXING BOLT SET	1
6	FAA199	MOUNT CAP	4
7	FAA200	MOUNT CAP	2
8	FSB241-16	CANTI BOSS	2
9	FSN025	NUT PLATE	1
10	FEE451	BOTOM STOPPER	1
11	FKE175-00	UPPER ASSY	1
12	FEP086	REBOUND RUBBER	1
13	FSW042	WASHER	1
14	FSB067-21	FIXING BOLT	1
15	FEE385-10	SPRING GUIDE	1
16	FEP131-02	DAMPER	1
17	FEP238	MAIN SPRING	1
18	FEE196	SPRING GUIDE	1
19	FKE005-10	ADJUSTER ASSY	1
20	FUN006-18	DAMPER UNIT	1
21	FKE028-21	LO TOP CAP ASSY	1