NO.	DESCRIPTION	MATERIAL	QTY
1	TOP	AL-6061	1
2	ORIENTATION BALL	STEEL	2
3	ORIENTATION SPRING	STEEL	1
4	REBOUND ADJUST MENT	AL-6061	1
5	AIR VALVE SET	AL-6061	1
6	O RING	NBR	1
7	O RING	NBR	1
8	O RING	NBR	1
9	MAIN SPINDLE	AL-7075	1
10	CONTROL ROD	AL-6061	1
11	O RING	NBR	2
12	E RING	STEEL	1
13	REBOUND CONTROL SCREW	AL-6061	1
14	OIL SEAL SET	AL-7075	1
15	O RING	NBR	1
16	X RING	NBR	1
17	DU	STEEL	1
18	SCREW	STEEL	1
19	INSIDE BUMPER	NBR	1
20	WASHER	STEEL	1
21	SHIM	STEEL	1
22	SHIM	STEEL	1
23	TOP PISTON	AL-6061	1
24	TEFLON	TEFLON	1
25	O RING	NBR	1
26	SPUUORT SET	AL-6061	1
27	X RING	NBR	1
28	TEFLON	TEFLON	1
29	O RING	NBR	1
30	MAIN BODY	AL-6061	1
31	FLOATING PISTON	NL66	1
32	X RING	NBR	1
33	AIR BODY	AL-6061	1
34	X RING	NBR	1
35	TEFLON	TEFLON	1
36	DUST SEAL	NBR	1
37	SCREW	STEEL	1
38	O RING	NBR	1
39	DU	STEEL	2
40	AL BUSHING	AL-6061	2
	AL BUSHING	AL-6061	2
41	STICKER		1
42			
43			

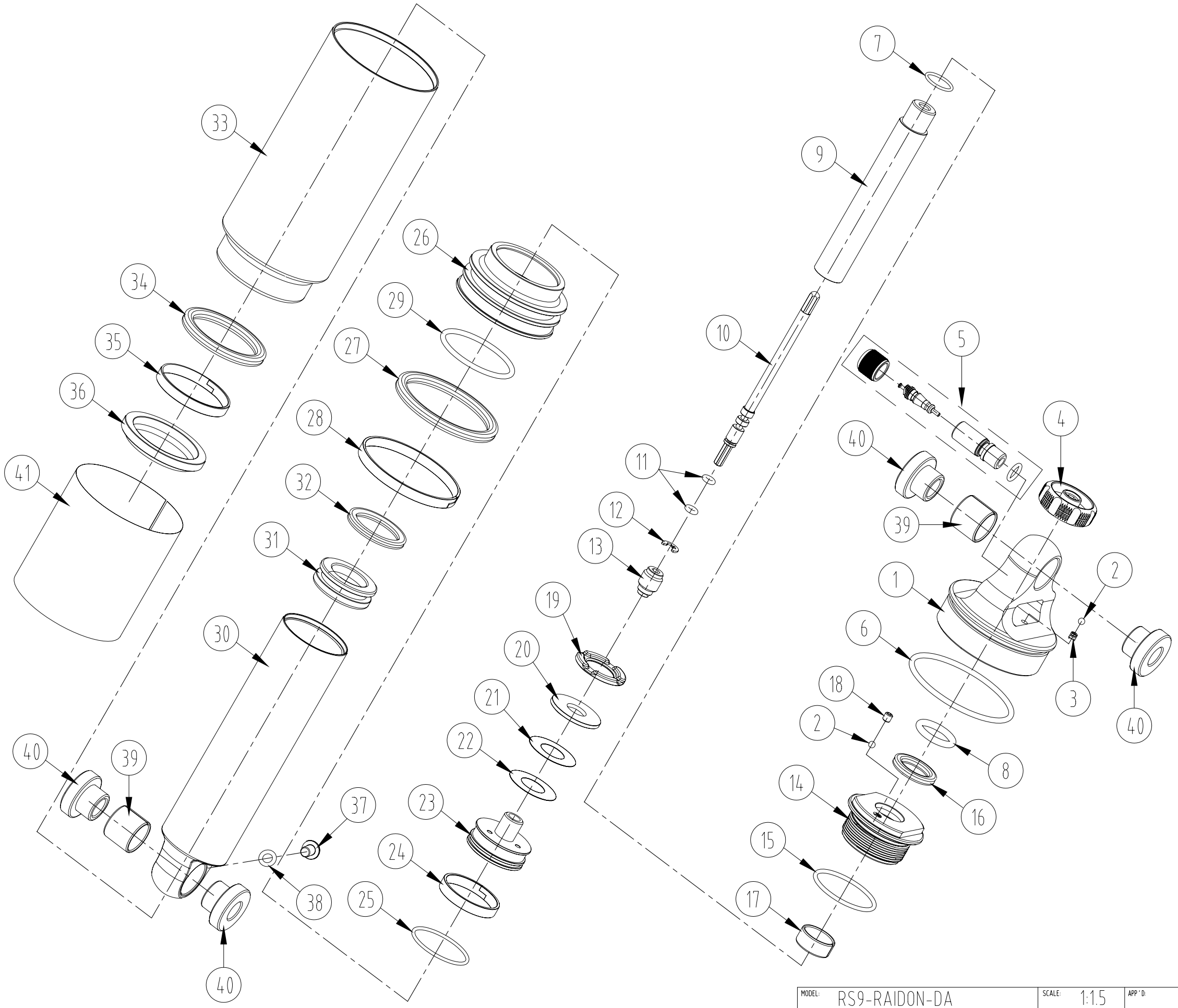

MODEL: RS9-RAIDON-DA	SCALE: 1:1.5	APP'D:
		CH'D:
	DATE: 07.12.01	DRAWN: Shun
SR SUNTOUR INC.	DRAWING:	