SF9-DUROLUX-20QLC
model year 2009

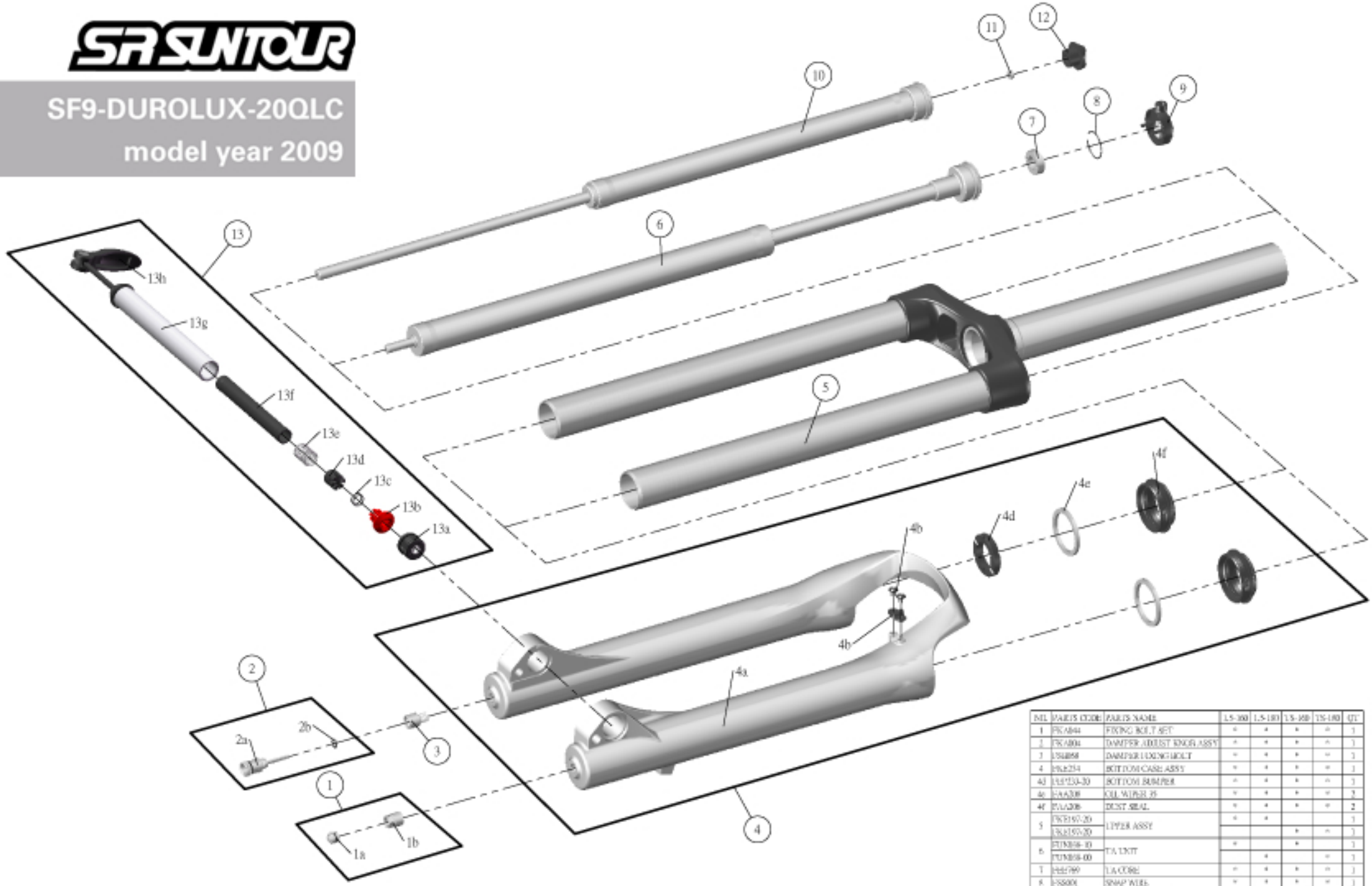

NO.	PARTS CODE	PARTS NAME	LS-100	LS-100	TS-100	TS-100	QT.
1	PKA044	FIXING BOLT SET	*	*	*	*	1
2	PKA004	DAMPER ADJUST KNOB ASSY	*	*	*	*	1
3	15M050	DAMPER LOCKING BOLT	*	*	*	*	1
4	16K234	BOTTOM CASE ASSY	*	*	*	*	1
4d	15U733-30	BOTTOM BUMPER	*	*	*	*	1
4e	FAA308	OIL WIPER 35	*	*	*	*	2
4f	FAA206	DUST SEAL	*	*	*	*	2
5	PKE167-20	UPPER ASSY	*	*			1
	PKE165-20				*	*	1
6	PUN018-10	TA UNIT	*		*		1
	PUN018-00			*		*	1
7	16L089	TA CORE	*	*	*	*	1
8	15S001	SNAP WIRE	*	*	*	*	1
9	15K184	TA ELASTOMER ASSY	*	*	*	*	1
10	PUN018-00	DAMPER UNIT	*	*	*	*	1
11	FAA118	VALVE CAP SEAL	*	*	*	*	1
12	FAA123-02	VALVE CAP	*	*	*	*	1
13	FAA068-00	QLC20 AXLE SET	*	*	*	*	1