SR SUNTOUR

SF11EPICON-DS-RLD-15QLC

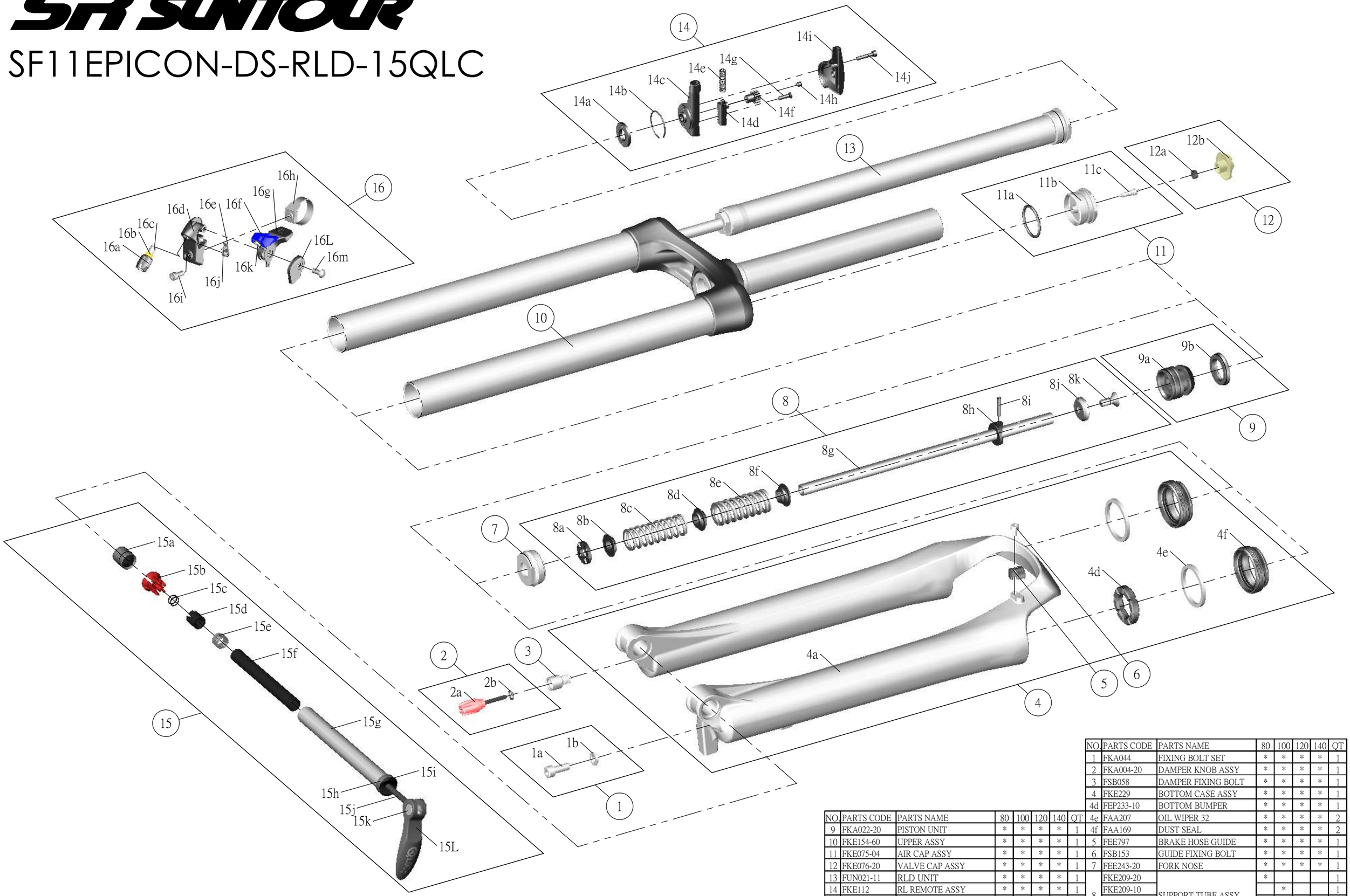

NO.	PARTS CODE	PARTS NAME	80	100	120	140	QT
1	FKA044	FIXING BOLT SET	*	*	*	*	1
2	FKA004-20	DAMPER KNOB ASSY	*	*	*	*	1
3	FSB058	DAMPER FIXING BOLT	*	*	*	*	1
4	FKE229	BOTTOM CASE ASSY	*	*	*	*	1
4d	FEP233-10	BOTTOM BUMPER	*	*	*	*	1
4e	FAA207	OIL WIPER 32	*	*	*	*	2
4f	FAA169	DUST SEAL	*	*	*	*	2
5	FEE797	BRAKE HOSE GUIDE	*	*	*	*	1
6	FSB153	GUIDE FIXING BOLT	*	*	*	*	1
7	FEE243-20	FORK NOSE	*	*	*	*	1
8	FKE209-20	SUPPORT TUBE ASSY	*				1
	FKE209-10			*			1
	FKE209-00				*		1
	FKE209-30					*	1

NO.	PARTS CODE	PARTS NAME	80	100	120	140	QT
9	FKA022-20	PISTON UNIT	*	*	*	*	1
10	FKE154-60	UPPER ASSY	*	*	*	*	1
11	FKE075-04	AIR CAP ASSY	*	*	*	*	1
12	FKE076-20	VALVE CAP ASSY	*	*	*	*	1
13	FUN021-11	RLD UNIT	*	*	*	*	1
14	FKE112	RL REMOTE ASSY	*	*	*	*	1
15	FKA069-00	QLC15 AXLE SET	*	*	*	*	1
16	SL9SC-RLO	REMOTE LEVER ASSY	*	*	*	*	1