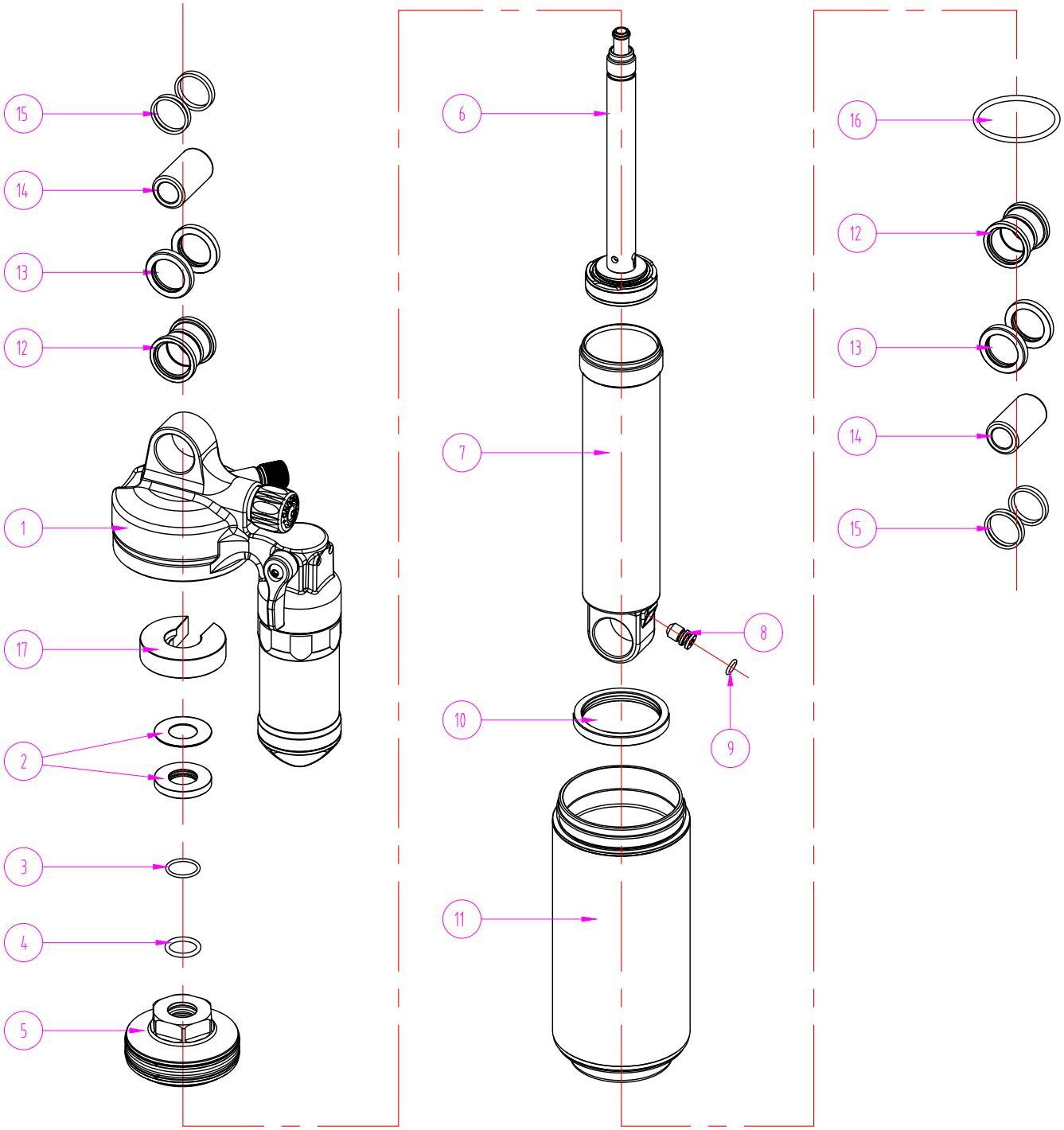

SR SUNTOUR

RS18-TRIAIR

Date	2018.09.18	Version	1
Amended	2019.03.28		

NO.	DESCRIPTION	SR CODE	MATERIAL	216 -63	200 -57	210 -50	210 -55	230 -60	230 -65	250 -70	250 -75
17	TRAVEL SPACER	REE152	ABS			1		1		1	
16	O RING	RAA100	NBR	1	1	1	1	1	1	1	1
15	O RING	RAA101	NBR	8	8	8	8	8	8	8	8
14	AL BUSHING	REE175	AL6061	1	1	1	1	1	1	1	1
		REE175		1	1	1	1	1	1	1	1
		REE174		1	1	1	1	1	1	1	1
		REE174		1	1	1	1	1	1	1	1
13	SPHERE	RAA091	ABS	2	2	2	2	2	2	2	2
		RAA091		2	2	2	2	2	2	2	2
12	BUSHING	REE114	PLASTIC	4	4	4	4	4	4	4	4
11	AIR CANNISTER ASSEMBLY	RBA516-90								1	1
		RBA516-50				1	1				
		RBA516-40						1	1		
		RBA516-20			1						
		RBA516-10		1							
10	TOP OUT BUMPER	REE160	NBR	1	1	1	1	1	1	1	1
9	SCHRADER PLUG	RSB016	AL6061	1	1	1	1	1	1	1	1
8	O RING	FAA270	NBR	1	1	1	1	1	1	1	1
7	MAIN BODY	RLB123-90	AL6061							1	1
		RLB123-50				1	1				
		RLB123-40						1	1		
		RLB123-20			1						
		RLB123-10		1							
6	MAIN SPINDLE ASSEMBLY	RBA551-60				1	1				
		RBA551-50						1	1		
		RBA551-40								1	1
		RBA551-20			1						
		RBA551-10		1							
5	SUPPORT SET ASSEMBLY	RBA514-20		1	1	1	1	1	1	1	1
4	O RING	FAA392	NBR	1	1	1	1	1	1	1	1
3	O RING	RAA012	NBR		1						
2	TRAVEL SPACER	RSW108	AL6061		1						
	SHIM	RSW097	SK5	1		1	1	1	1	1	1
1	TOP ASSEMBLY	RBA515-40		1	1	1	1	1	1	1	1