SF22-X1-32-Air-DS-LO-27.5-100-TS

Date	2025.12.17	Version	1
Amended			

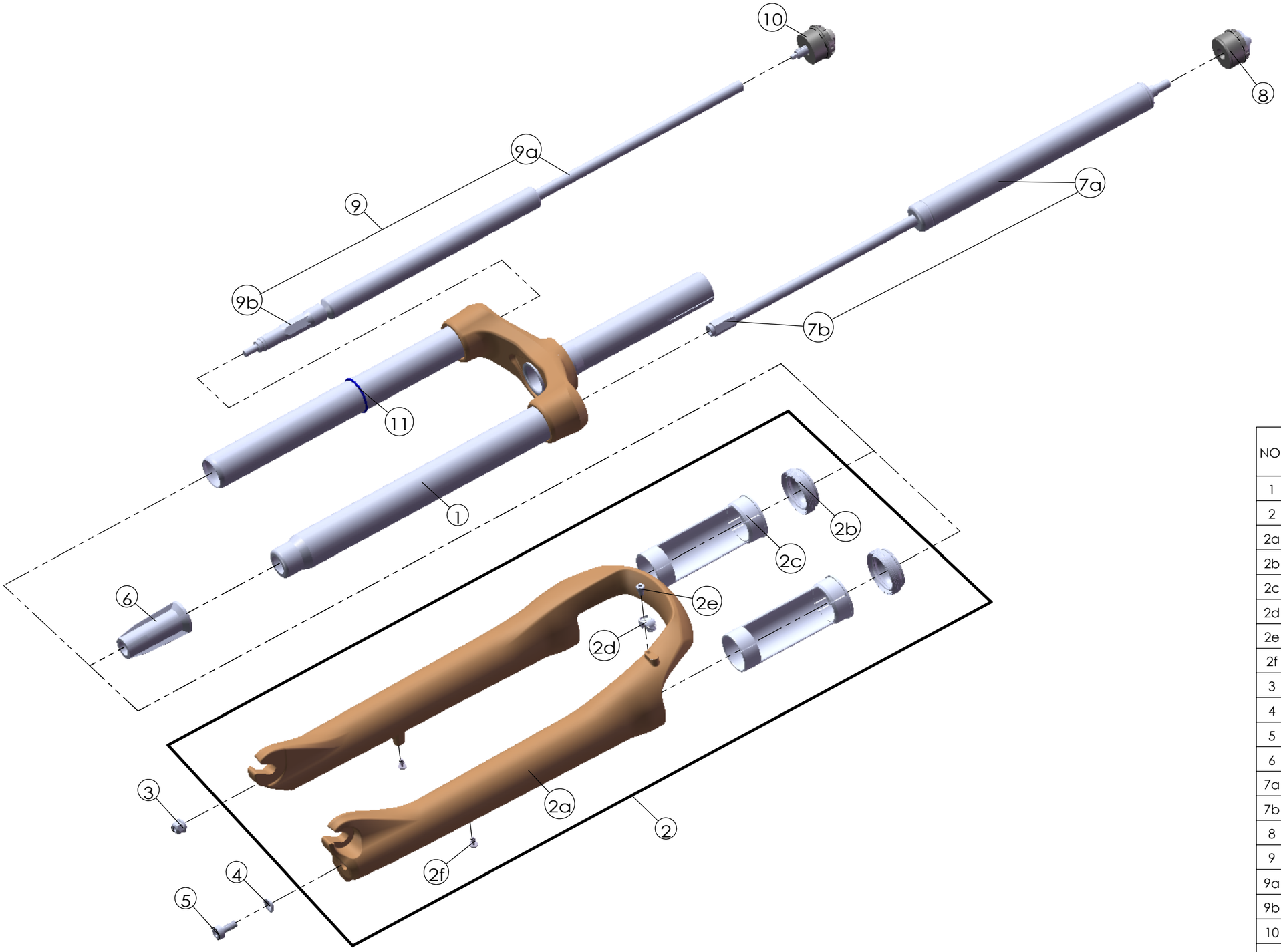

NO.	PART NAME	PART CODE	QTY.
			100
1	UPPER ASSY	FKZ098-26	1
2	BOTTOM CASE ASSY	FKZ152-20	1
2a	BOTTOM CASE	FPB515-15	1
2b	DUST SEAL	FAA169-20	2
2c	SLIDER SLEEVE	FEG137	2
2d	HOSE GUIDE	FEG166	1
2e	FIXING BOLT	FSB153	1
2f	MOUNT CAP	FAA199	2
3	FIXING NUT	FSN023	1
4	WASHER	FSW025	1
5	FIXING BOLT	FSB070	1
6	BOTTOM STOPPER	FEG640-10	1
7a	AIR ASSY	FUN250-10	1
7b	BOTTOM STOPPER	FEE314-71	1
8	AIR CAP ASSY	FKE597	1
9	DAMPER UNIT	FUN140-01	1
9a	DAMPER BODY	FUN140-00	1
9b	SUPPORT TUBE	FEE847-01	1
10	LO ADJUST SYSTEM	FKE526-21	1
11	O RING	FAA397-00	1