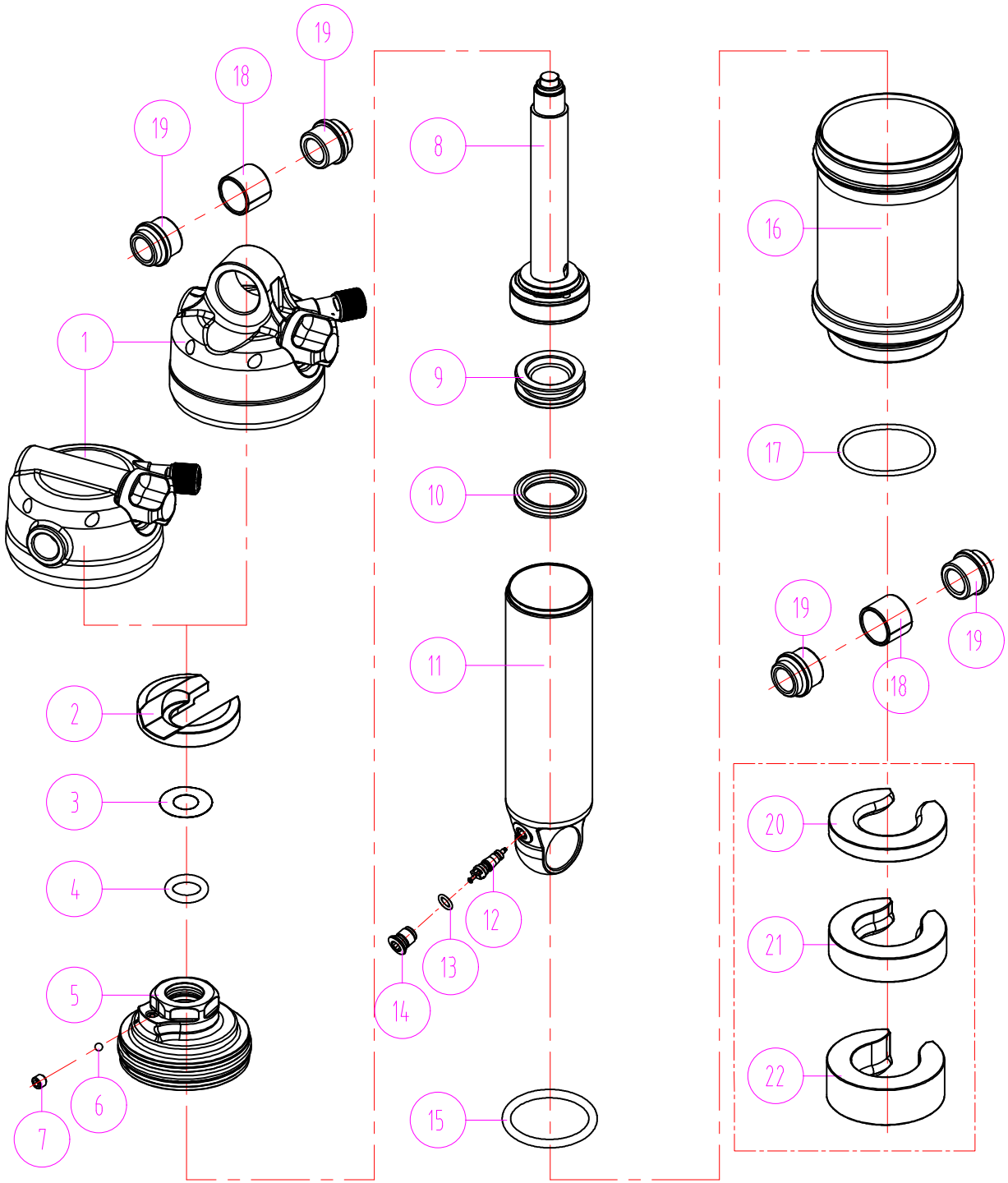

RS24-EDGEX R

METRIC / TRUNNIO

Date	2023.03.10	Version	1
Amended			

項次	零件名稱 DESCRIPTION	SR品 CODE	230 METRIC	205 TRUNNIO	210 METRIC	185 TRUNNIO	190 METRIC	165 TRUNNIO	170 METRIC	145 TRUNNIO
22	減壓塞 OLIVE REDUCER-Large	REE320-15								
21	減壓塞 OLIVE REDUCER-Medium	REE320-10								
20	減壓塞 OLIVE REDUCER-Small	REE320-05								
19	鋼珠 SHING-ø10	RAA131	4	2	4	2	4	2	4	2
	鋼珠 SHING-ø8	RAA072								
	鋼珠 SHING-ø6	RAA073								
18	自潤軸承	REE074	2	1	2	1	2	1	2	1
17	O 型環 G	RAA100	1	1	1	1	1	1	1	1
16	氣室主體組 INDER ASSEMBLY	RBA339-35							1	1
		RBA339-45					1	1		
		RBA339-55			1	1				
		RBA339-65	1	1						
15	O 型環 G	FAA352	1	1	1	1	1	1	1	1
14	氣閥蓋 AP	RAA102	1	1	1	1	1	1	1	1
13	O 型環 G	FAA140	1	1	1	1	1	1	1	1
12	氣閥 VALVE	FAA170-10	1	1	1	1	1	1	1	1
11	油體 N BODY	RLB184-35							1	1
		RLB184-45					1	1		
		RLB184-55			1	1				
		RLB184-65	1	1						
10	X 型環 G	RAA046	1	1	1	1	1	1	1	1
9	浮動活塞 G PISTON	REE066	1	1	1	1	1	1	1	1
8	油軸心組 PINDLE ASSEMBLY	RBA345-35-10							1	1
		RBA345-45-10					1	1		
		RBA345-55-10			1	1				
		RBA345-65-10	1	1						
7	固定螺絲	PSB103	1	1	1	1	1	1	1	1
6	2.5L 鋼珠 L	DS0001	1	1	1	1	1	1	1	1
5	支撐座組 T SET ASSEMBLY	RBA401	1	1	1	1	1	1	1	1
4	O 型環 G	RAA052	1	1	1	1	1	1	1	1
3	軟墊 HER	RSW085	1	1	1	1	1	1	1	1
2	行程墊塊 SPACER	REE321-5	1	1	1	1	1	1	1	1
1	正面定組 SEMBLY	RBA338-30		1		1		1		1
		RBA337-30	1		1		1		1	
			65 60	65 60	55 50	55 50	45 40	45 40	35 30	35 30