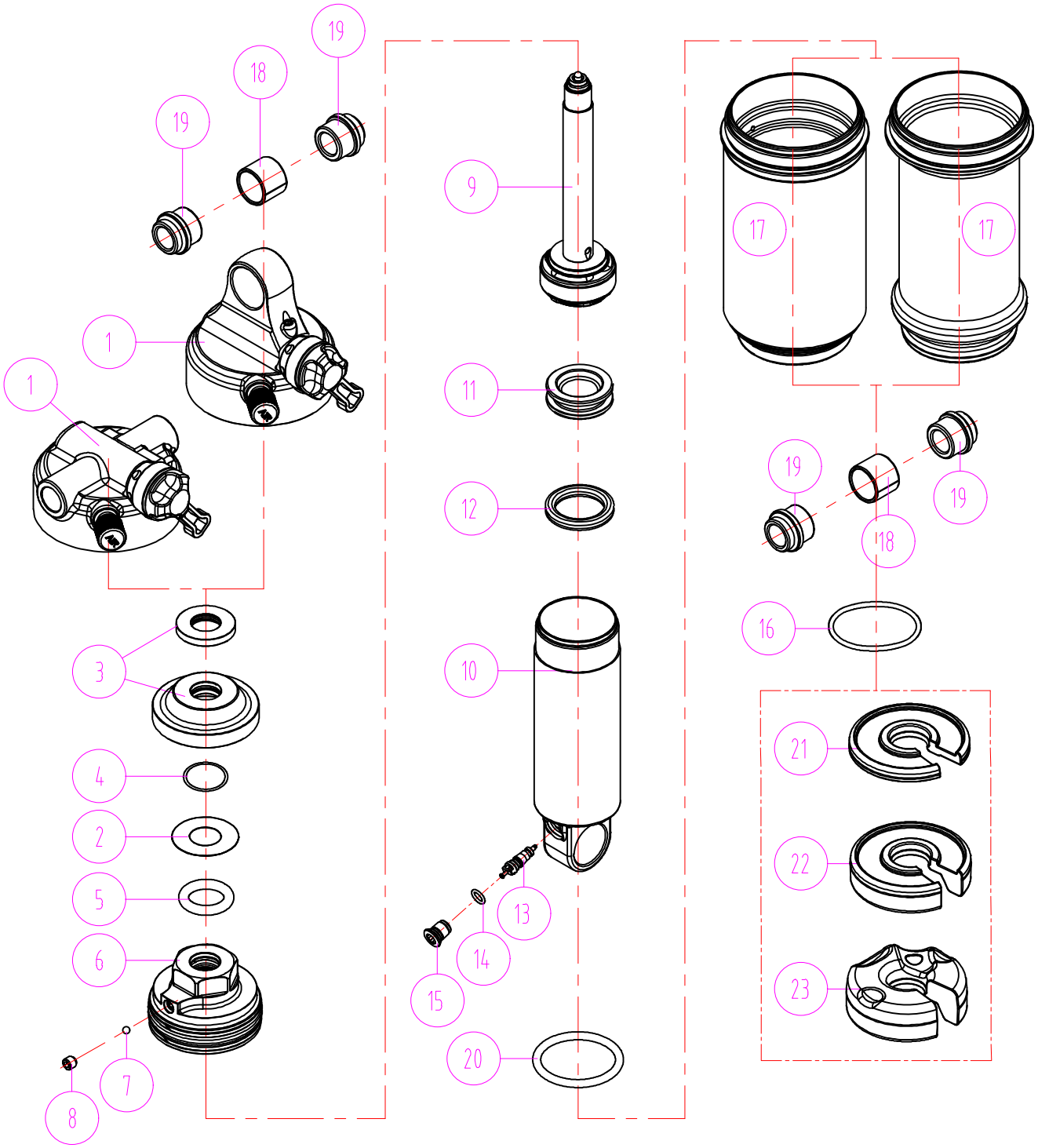

SR SUNTOUR

RS24-EDGEX 2CR

METRIC / TRUNNIO

Date	2024.12.24	Version	1
Amended			

NO.	DESCRIPTION	SR CODE	230 METRIC				205 TRUNNIO				210 METRIC				185 TRUNNIO				190 METRIC				165 TRUNNIO				170 METRIC				145 TRUNNIO			
			65	62.5	60	57.5	65	62.5	60	57.5	55	52.5	50		55	52.5	50		45	42.5	40		45	42.5	40		35	32.5	30		35	32.5	30	
23	AIR VOLUME REDUCER-Large	REE251-15																																
22	AIR VOLUME REDUCER-Medium	REE251-10																																
21	AIR VOLUME REDUCER-Small	REE251-05																																
20	O RING	FAA352			1				1				1				1				1				1				1				1	
19	AL BUSHING-ø10	RAA131																																
	AL BUSHING-ø8	RAA072			4				2				4				2				4				2				4				2	
	AL BUSHING-ø6	RAA073																																
18	DU	REE074			2				1				2				1				2				1				2				1	
17	SV-CAS CYLINDER ASSEMBLY	RBA350-35																											1				1	
		RBA350-45																			1				1									
		RBA350-55											1				1																	
		RBA350-65			1				1																									
	LV-CAS CYLINDER ASSEMBLY	RBA348-35																											1				1	
		RBA348-45																			1				1									
		RBA348-55											1				1																	
		RBA348-65			1				1																									
16	O RING	RAA100			1				1				1				1				1				1				1				1	
15	AIR CAP	RAA102			1				1				1				1				1				1				1				1	
14	O RING	FAA140			1				1				1				1				1				1				1				1	
13	AIR VALVE	FAA170-10			1				1				1				1				1				1				1				1	
12	X RING	RAA046			1				1				1				1				1				1				1				1	
11	FLOATING PISTON	REE066			1				1				1				1				1				1				1				1	
10	MAIN BODY	RLB197-35																											1				1	
		RLB197-45																			1				1									
		RLB197-55											1				1																	
		RLB197-65			1				1																									
9	MAIN SPINDLE ASSEMBLY	RBA331-35-10																											1				1	
		RBA331-45-10																			1				1									
		RBA331-55-10											1				1																	
		RBA331-65-10			1				1																									
8	SCREW	PSB103			1				1				1				1				1				1				1				1	
7	STEEL BALL	DS0001			1				1				1				1				1				1				1				1	
6	SUPPORT SET ASSEMBLY	RBA304			1				1				1				1				1				1				1				1	
5	O RING	RAA074			1				1				1				1				1				1				1				1	
4	O RING	RAA012		1	1	1		1	1	1		1	1			1	1			1	1			1	1			1	1			1	1	1
3	TRAVEL SPACER	REE203-7				1				1																								
		REE203-5			1				1				1				1				1				1				1					1
		RSW108		1				1				1				1				1				1				1				1		
2	WASHER	RSW097			1				1				1				1				1				1				1				1	
1	TOP ASSEMBLY	RBA303-10							1								1								1								1	
		RBA301-10			1								1								1								1					