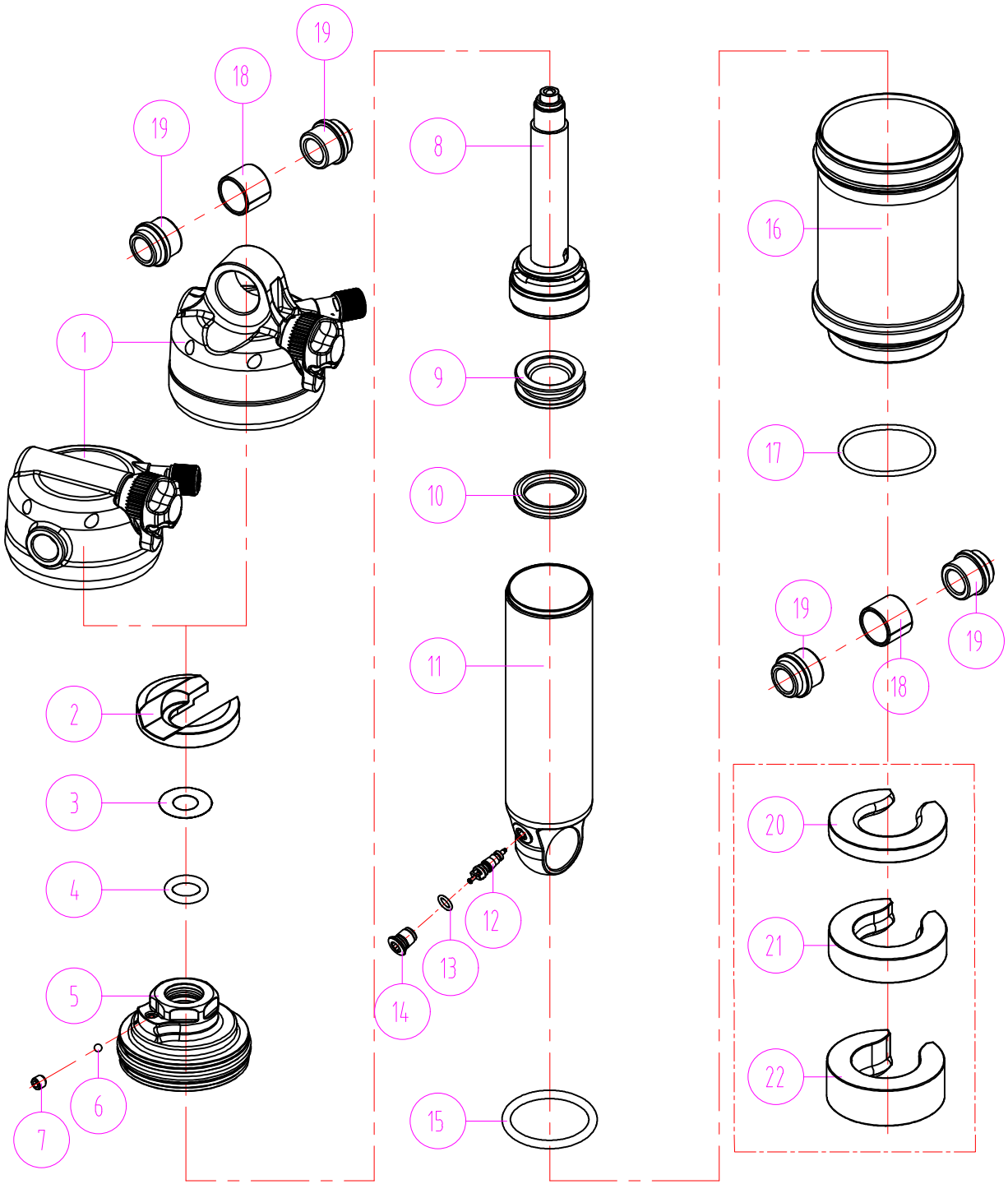

RS24-EDGEX RC

METRIC / TRUNNIO

Date	2023.03.10	Version	1
Amended			

項次	零件名稱 DESCRIPTION	品號 CODE	230 METRIC	205 TRUNNIO	210 METRIC	185 TRUNNIO	190 METRIC	165 TRUNNIO	170 METRIC	145 TRUNNIO
22	調壓塊-LOWER REDUCER-Large	REE320-15								
21	調壓塊-LOWER REDUCER-Medium	REE320-10								
20	調壓塊-LOWER REDUCER-Small	REE320-05								
19	鋸齒墊-SHIM-ø10	RAA131	4	2	4	2	4	2	4	2
	鋸齒墊-SHIM-ø8	RAA072								
	鋸齒墊-SHIM-ø6	RAA073								
18	自潤軸承	REE074	2	1	2	1	2	1	2	1
17	O 型環	RAA100	1	1	1	1	1	1	1	1
16	氣室主體組 UNDER ASSEMBLY	RBA339-35							1	1
		RBA339-45					1	1		
		RBA339-55			1	1				
		RBA339-65	1	1						
15	O 型環	FAA352	1	1	1	1	1	1	1	1
14	氣閥蓋 CAP	RAA102	1	1	1	1	1	1	1	1
13	O 型環	FAA140	1	1	1	1	1	1	1	1
12	氣閥 VALVE	FAA170-10	1	1	1	1	1	1	1	1
11	主體 MAIN BODY	RLB184-35							1	1
		RLB184-45					1	1		
		RLB184-55			1	1				
		RLB184-65	1	1						
10	X 型環	RAA046	1	1	1	1	1	1	1	1
9	浮動活塞 FLOATING PISTON	REE066	1	1	1	1	1	1	1	1
8	主軸心部 SPINDLE ASSEMBLY	RBA343-35-10							1	1
		RBA343-45-10					1	1		
		RBA343-55-10			1	1				
		RBA343-65-10	1	1						
7	固定螺絲	PSB103	1	1	1	1	1	1	1	1
6	2 STEEL 鋼珠	DS0001	1	1	1	1	1	1	1	1
5	主軸座組 SET ASSEMBLY	RBA401	1	1	1	1	1	1	1	1
4	O 型環	RAA052	1	1	1	1	1	1	1	1
3	軸 WASHER	RSW085	1	1	1	1	1	1	1	1
2	行程墊塊 SPACER	REE321-5	1	1	1	1	1	1	1	1
1	工作流組 ASSEMBLY	RBA338-20		1		1		1		1
		RBA337-20	1		1		1		1	
			65 60	65 60	55 50	55 50	45 40	45 40	35 30	35 30