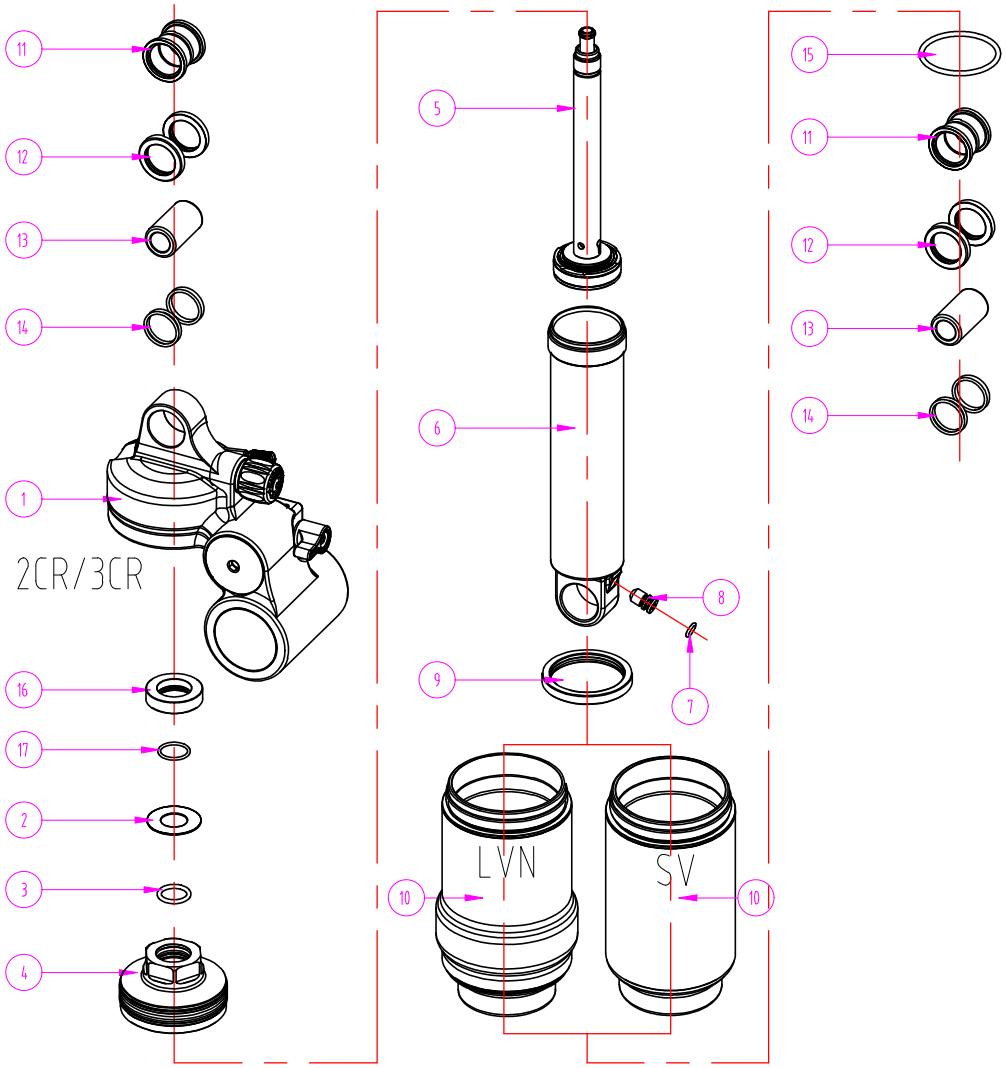

RS24-TRIAIR 2 -2CR/3CR-SV&LVN

Date	2022.11.21	Version	2
Amended	2024.10.20		

NO.	DESCRIPTION	SR CODE	MATERIAL	250 -75	250 -70	230 -65	230 -62.5	230 -60	230 -57.5	210 -55	210 -52.5	210 -50	190 -45	190 -42.5	190 -40	200 -51
17	O RING	RAA101	NBR		1		1	1	1		1	1		1	1	
16	TRAVEL SPACER	REE311-07	ABS						1							
		REE311-05			1			1				1			1	
		REE311-02					1				1			1		
15	O RING	RAA100	NBR	1	1	1	1	1	1	1	1	1	1	1	1	1
14	O RING	RAA101	NBR	8	8	8	8	8	8	8	8	8	8	8	8	8
13	AL BUSHING	REE176	AL6061	1	1	1	1	1	1	1	1	1	1	1	1	1
		REE176		1	1	1	1	1	1	1	1	1	1	1	1	1
		REE175		1	1	1	1	1	1	1	1	1	1	1	1	1
		REE175		1	1	1	1	1	1	1	1	1	1	1	1	1
		REE174		1	1	1	1	1	1	1	1	1	1	1	1	1
		REE174		1	1	1	1	1	1	1	1	1	1	1	1	1
12	SPHERE	RAA091	ABS	2	2	2	2	2	2	2	2	2	2	2	2	2
		RAA091		2	2	2	2	2	2	2	2	2	2	2	2	2
11	BUSHING	REE114	PLASTIC	4	4	4	4	4	4	4	4	4	4	4	4	4
10	AIR CANNISTER ASSEMBLY (LVN)	RBA910-51-20														1
		RBA910-45-20											1	1	1	
		RBA910-55-20								1	1	1				
		RBA910-65-20				1	1	1	1							
		RBA910-75-20		1	1											
	AIR CANNISTER ASSEMBLY (SV)	RBA910-51-10														1
		RBA910-45-10											1	1	1	
		RBA910-55-10								1	1	1				
		RBA910-65-10				1	1	1	1							
		RBA910-75-10		1	1											
9	TOP OUT BUMPER	REE160	NBR	1	1	1	1	1	1	1	1	1	1	1	1	1
8	SCHRADER PLUG	RSB016	AL6061	1	1	1	1	1	1	1	1	1	1	1	1	1
7	O RING	FAA270	NBR	1	1	1	1	1	1	1	1	1	1	1	1	1
6	MAIN BODY	RLB187-51	AL6061													1
		RLB187-45											1	1	1	
		RLB187-55								1	1	1				
		RLB187-65				1	1	1	1							
		RLB187-75		1	1											
5	MAIN SPINDLE ASSEMBLY	RBA907-51-10														1
		RBA907-45-10											1	1	1	
		RBA907-55-10								1	1	1				
		RBA907-65-10				1	1	1	1							
		RBA907-75-10		1	1											
4	SUPPORT SET ASSEMBLY	RBA902		1	1	1	1	1	1	1	1	1	1	1	1	1
3	O RING	RAA052	NBR		1											
2	SHIM	RSW097-10	SK5	1		1	1	1	1	1	1	1	1	1	1	1
1	TOP ASSEMBLY	RBA900-40	3CR	1	1	1	1	1	1	1	1	1	1	1	1	1
		RBA900-50	2CR	1	1	1	1	1	1	1	1	1	1	1	1	1