SR SUNTOUR

Date	2025.12.05	Version	1
Amended			

SF24-X1-32-air-DS-BOOST-LO-R-15AH3/15AH4 -110-29-C68-100,120

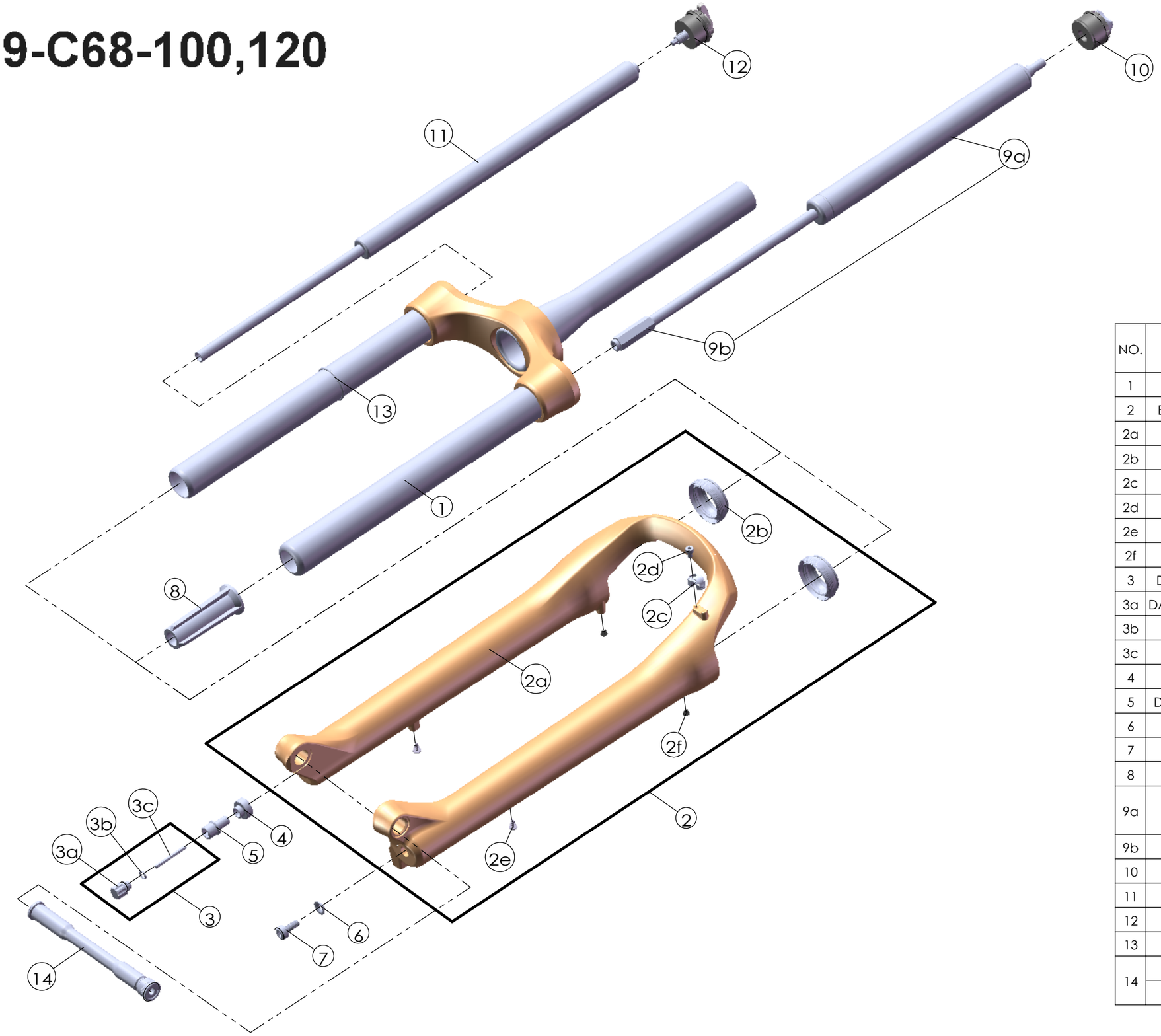

NO.	PART NAME	PART CODE	QTY.	
			100	120
1	UPPER ASSY	FKZ181-02	1	1
2	BOTTOM CASE ASSY	FKZ179-10	1	1
2a	BOTTOM CASE	FPB520-10	1	1
2b	DUST SEAL	FAA169-20	2	2
2c	HOSE GUIDE	FEG166	1	1
2d	FIXING BOLT	FSB153	1	1
2e	MOUNT CAP	FAA199	2	2
2f	MOUNT CAP	FAA199-10	2	2
3	DAMPER KNOB ASSY	FKA004-40	1	1
3a	DAMPER ADJUST KNOB	FEE845-10	1	1
3b	0 RING	FAA083	1	1
3c	HEXAGON SHAFT	FEE131-10	1	1
4	SLEEVE	FEG363-20	1	1
5	DAMPER FIXING BOLT	FSB058-20	1	1
6	WASHER	FSW025	1	1
7	FIXING BOLT	FSB070	1	1
8	BOTTOM STOPPER	FEG610-00	1	1
9a	AIR ASSY	FUN250-10	1	-
		FUN250-20	-	1
9b	SUPPORT TUBE	FEE314-70	1	1
10	AIR CAP ASSY	FKE597	1	1
11	DAMPER UNIT	FUN082-20	1	1
12	LO ADJUST SYSTEM	FKE526-21	1	1
13	0 RING	FAA397-00	1	1
14	15AH3 AXLE SET	FKA124-00	1	1
	15AH4 AXLE SET	FKA133-02	1	1