Date	2023.08.20	Version	0
Amended			

SF25AION36-Boost-EQ-2CR-PCS-DS-15LH-110-27.5-AL1.8CTS-C74-O44-160,150,140,130,120

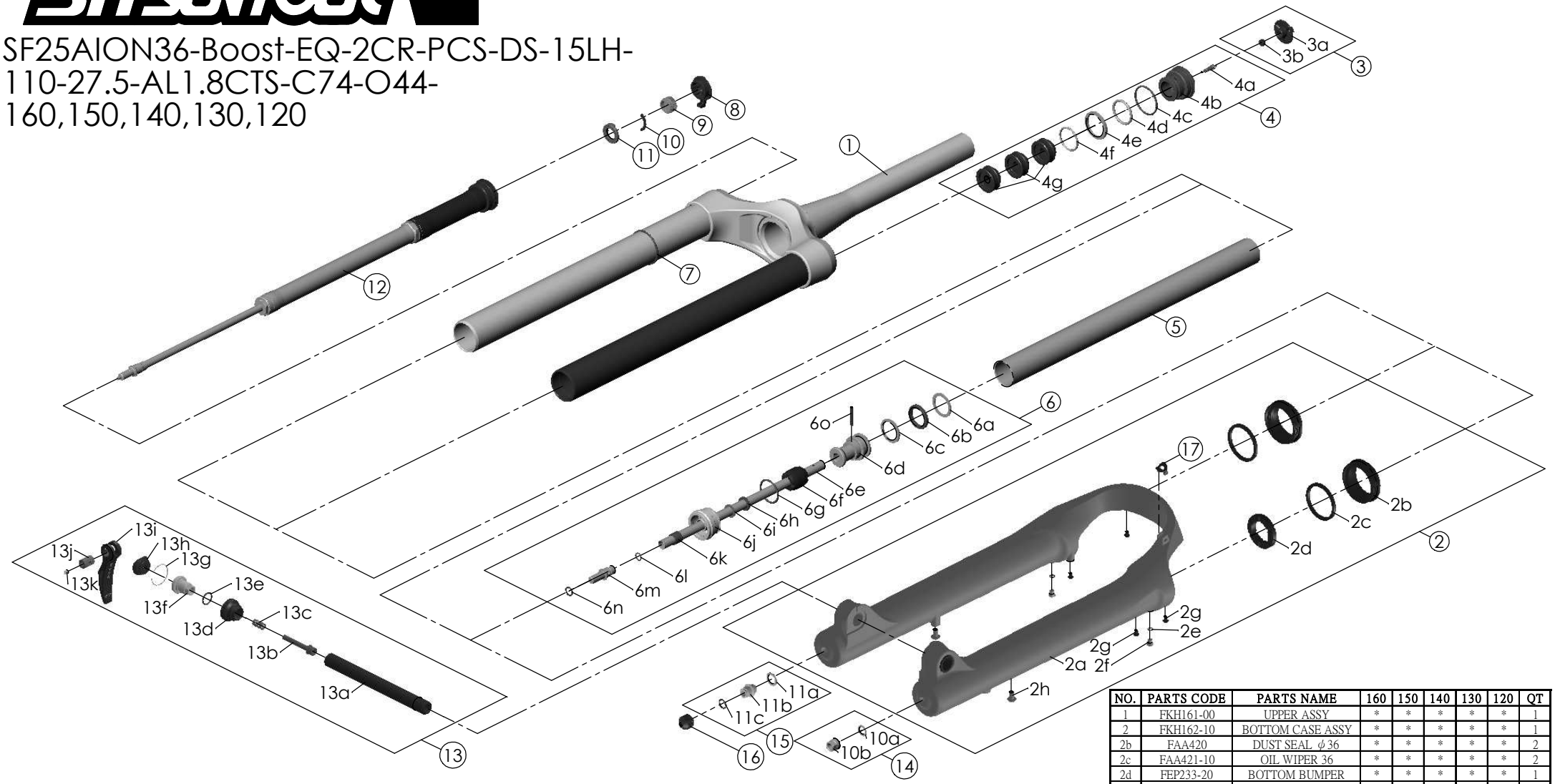

NO.	PARTS CODE	PARTS NAME	160	150	140	130	120	QT
11	FEE257	CLICK HOLDER	*	*	*	*	*	1
12	FUN171-78	2CR-PCS UNIT	*	*	*	*	*	1
13	FKA116-02	15LH-110 AXLE SET	*	*	*	*	*	1
14	FKA063-03	FIXING NUT SET	*	*	*	*	*	1
15	FKE436-10	FIXING NUT SET	*	*	*	*	*	1
16	FEG201	REBOUND KNOB	*	*	*	*	*	1
17	FEG034	CABLE CLIP	*	*	*	*	*	1

NO.	PARTS CODE	PARTS NAME	160	150	140	130	120	QT
5	FPE099-01	Air Cylinder	*	*	*	*	*	1
6	FKH154-00	SUPPORT TUBE ASSY	*					1
	FKH154-01			*				
	FKH154-02				*			
	FKH154-03					*		
	FKH154-04						*	
7	FAA397-40	O RING	*	*	*	*	*	1
8	FKE590-01	2CR KNOB ASSY	*	*	*	*	*	1
9	FEE256-10	ADJUST CORE	*	*	*	*	*	1
10	FEE258	ADJUST CLICK	*	*	*	*	*	1

NO.	PARTS CODE	PARTS NAME	160	150	140	130	120	QT
1	FKH161-00	UPPER ASSY	*	*	*	*	*	1
2	FKH162-10	BOTTOM CASE ASSY	*	*	*	*	*	1
2b	FAA420	DUST SEAL ϕ36	*	*	*	*	*	2
2c	FAA421-10	OIL WIPER 36	*	*	*	*	*	2
2d	FEP233-20	BOTTOM BUMPER	*	*	*	*	*	1
2e	FSB188	SEAL SCREW	*	*	*	*	*	2
2f	FAA270	O RING	*	*	*	*	*	2
2g	FAA200-10	MOUNT CAP	*	*	*	*	*	4
2h	FSB203	FIXING BOLT	*	*	*	*	*	2
3	FKE595	VALVE CAP ASSY	*	*	*	*	*	1
4	FKE594	AIR CAP ASSY	*					1
	FKE594-10			*				
	FKE594-20				*			
	FKE594-30					*		
	FKE594-40						*	
4g	FEG270-10	VOLUME REDUCER	*					3
				*				4
					*			5
						*		6
							*	7