Date	2024.09.06	Version	1
Amended	2025.07.14		

SF25MOBIE34-ABS-EQ-2CR-DS-15LH-700-AL1.8CTS-C74-O44-100,80

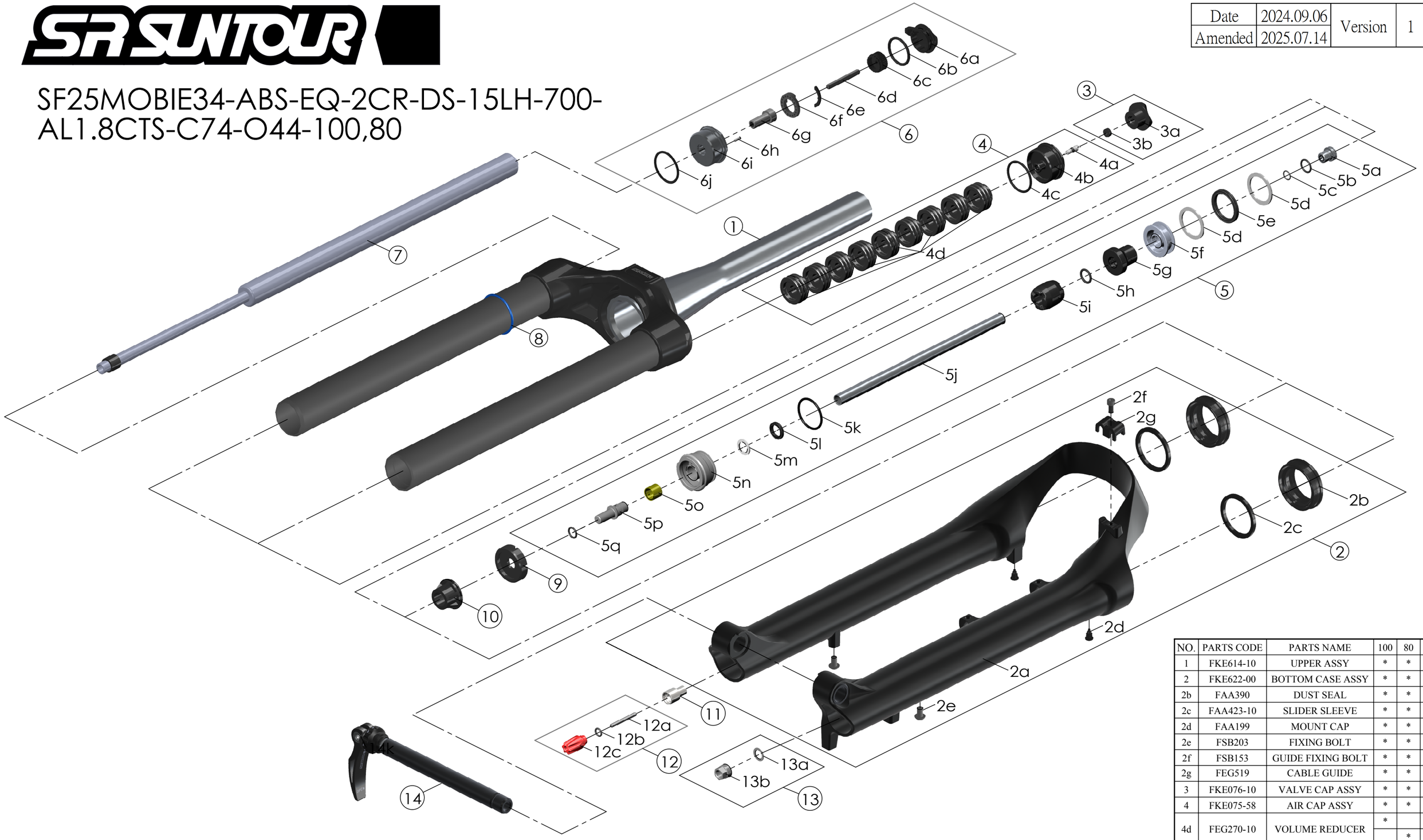

NO.	PARTS CODE	PARTS NAME	100	80	QT
1	FKE614-10	UPPER ASSY	*	*	1
2	FKE622-00	BOTTOM CASE ASSY	*	*	1
2b	FAA390	DUST SEAL	*	*	2
2c	FAA423-10	SLIDER SLEEVE	*	*	2
2d	FAA199	MOUNT CAP	*	*	2
2e	FSB203	FIXING BOLT	*	*	2
2f	FSB153	GUIDE FIXING BOLT	*	*	1
2g	FEG519	CABLE GUIDE	*	*	1
3	FKE076-10	VALVE CAP ASSY	*	*	1
4	FKE075-58	AIR CAP ASSY	*	*	1
4d	FEG270-10	VOLUME REDUCER	*		7
				*	9
5	FKE577-17	SUPPORT TUBE ASSY	*		1
	FKE577-27			*	1
5j	FPE002-72	SUPPORT TUBE	*		1
	FPE002-91			*	1
6	FKE526-27	2CR TOP CAP ASSY	*	*	1
6a	FEG361-04	2CR KNOB	*	*	1
7	FUN200-00	LO-R UNIT	*	*	1
8	FAA397-30	O RING	*	*	1
9	FEP687-10	BOTTOM BUMPER	*	*	1
10	FEG242-10	BOTTOM STOPPER	*	*	1

NO.	PARTS CODE	PARTS NAME	100	80	QT
11	FSB058	DAMPER FIXING BOLT	*	*	1
12	FKA004-22	DAMPER KNOB ASSY	*	*	1
13	FKA063-03	FIXING NUT SET	*	*	1
14	FKA116-12	15LH-100 AXLE SET	*	*	1