Date	2023.09.04	Version	2
Amended	2023.11.01		

SF25RAIDON34-Boost-EQ-R-2CR-DS-15LH -110-29-AL1.5CTS-C58-O51 -140,130,120,100

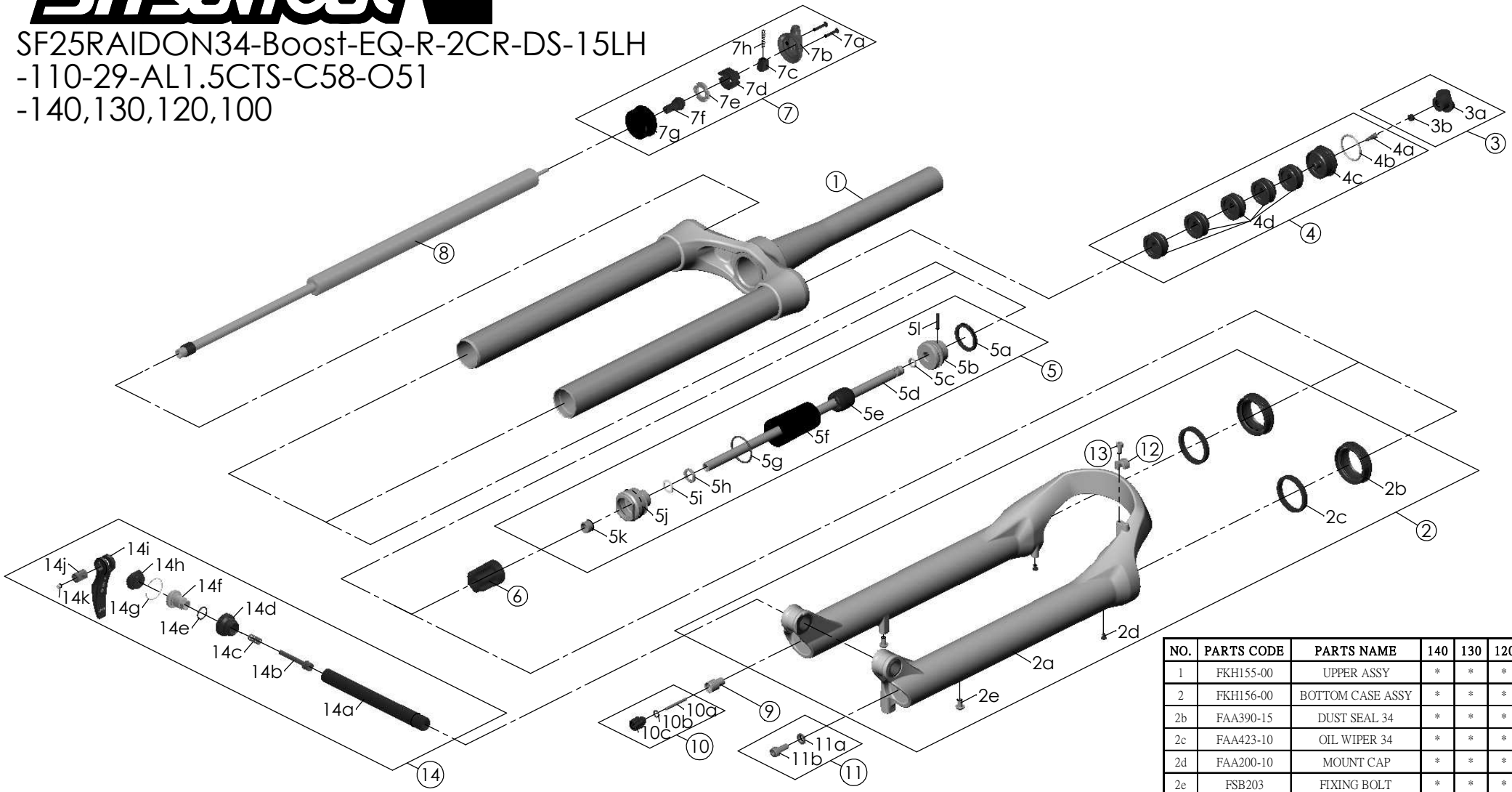

NO.	PARTS CODE	PARTS NAME	140	130	120	100	QT
1	FKH155-00	UPPER ASSY	*	*	*	*	1
2	FKH156-00	BOTTOM CASE ASSY	*	*	*	*	1
2b	FAA390-15	DUST SEAL 34	*	*	*	*	2
2c	FAA423-10	OIL WIPER 34	*	*	*	*	2
2d	FAA200-10	MOUNT CAP	*	*	*	*	2
2e	FSB203	FIXING BOLT	*	*	*	*	2
3	FKE076-10	VALVE CAP ASSY	*	*	*	*	1
4	FKE075-68	AIR CAP ASSY	*	*	*	*	1
4d	FEG270	VOLUME REDUCER	*				1
				*			2
					*		3
						*	5
5	FKE589-02	SUPPORT TUBE ASSY	*				1
	FKE589-00			*			1
	FKE589-03				*		1
	FKE589-07					*	1

NO.	PARTS CODE	PARTS NAME	140	130	120	100	QT
6	FEG192-10	BOTTOM STOPPER	*	*	*	*	1
7	FKE310-26	RL COVER ASSY	*	*	*	*	1
8	FUN201-10	RLR UNIT	*	*	*	*	1
9	FSB058	DAMPER FIXING BOLT	*	*	*	*	1
10	FKA004-30	REBOUND KNOB ASSY	*	*	*	*	1

NO.	PARTS CODE	PARTS NAME	140	130	120	100	QT
11	FKA044	FIXING BOLT SET	*	*	*	*	1
12	FEE797	BRAKE HOSE GUIDE	*	*	*	*	1
13	FSB153	GUIDE FIXING BOLT	*	*	*	*	1
14	FKA116-02	15LH-110 AXLE SET	*	*	*	*	1